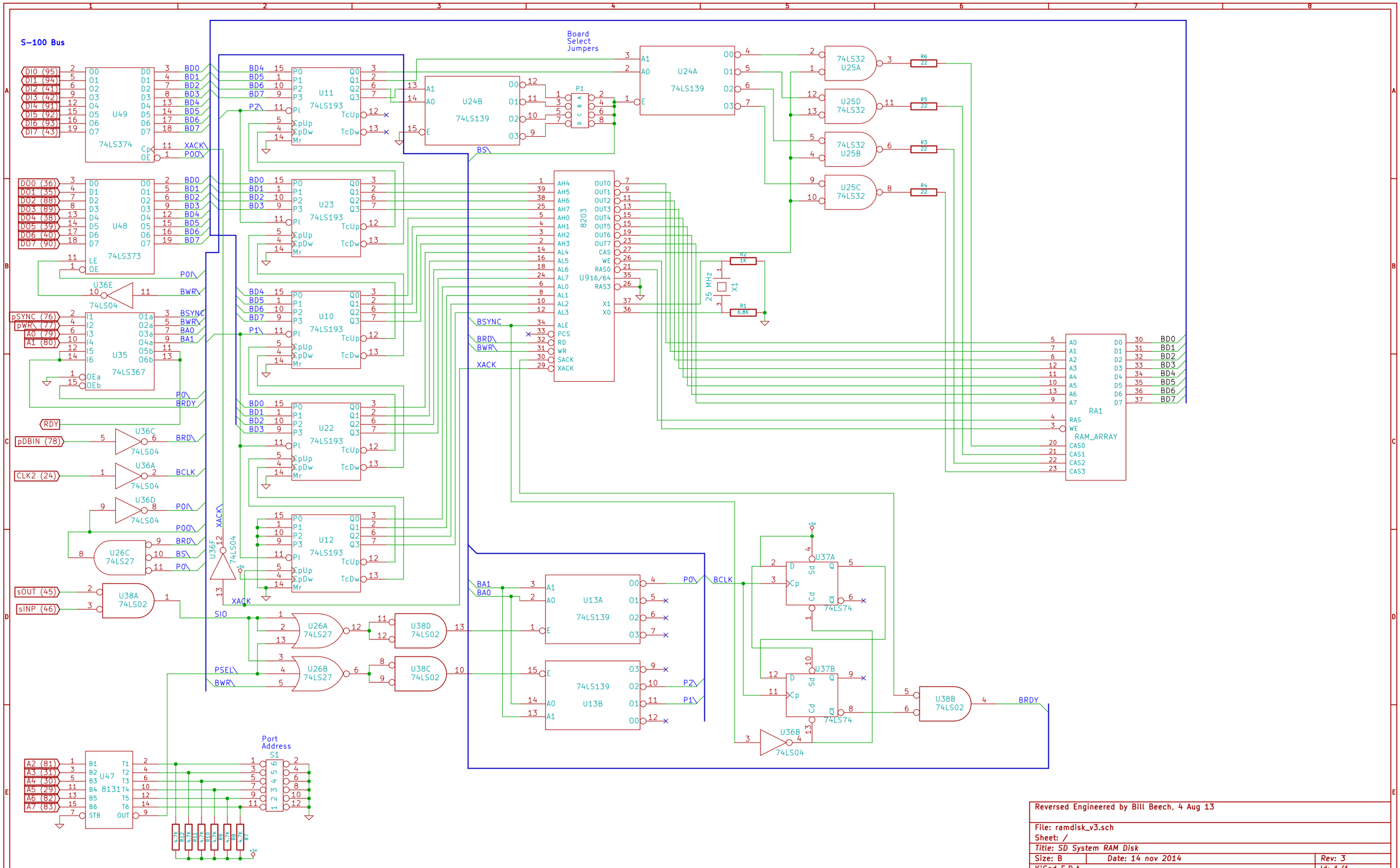
S-100 Bus
Board Select Jumpers
Port Address
U49 74LS374
U48 74LS373
U35 74LS367
U11 74LS193
U23 74LS193
U10 74LS193
U22 74LS193
U12 74LS193
U24B 74LS139
U24A 74LS139
U13A 74LS139
U13B 74LS139
U25A 74LS32
U25D 74LS32
U25B 74LS32
U25C 74LS32
U26A 74LS27
U26B 74LS27
U26C 74LS27
U37A 74LS74
U37B 74LS74
U38A 74LS02
U38B 74LS02
U38C 74LS02
U38D 74LS02
U36A 74LS04
U36B 74LS04
U36C 74LS04
U36D 74LS04
U36E 74LS04
U36F 74LS04
U47 8131
8203 U916/64
RA1 RAM_ARRAY
X1 25 MHz
R1 6.8K
R2 1K
R3 22
R4 22
R5 22
R6 22
P1
S1
Reversed Engineered by Bill Beech, 4 Aug 13
File: ramdisk_v3.sch
Sheet: /
Title: SD System RAM Disk
Size: B
Date: 14 nov 2014
Rev: 3
KiCad E.D.A.
Id: 1/1